PVP 23

Code: 23ES1104

I B.Tech - I Semester – Regular Examinations – JANUARY 2024

ENGINEERING GRAPHICS

(Common for CE, AIML, DS)

Duration: 3 hours Max. Marks: 70

Note: 1. This question paper contains 5 essay questions with an internal choice from each unit. Each question carries 14 marks.
2. All parts of Question must be answered in one place.

BL – Blooms Level CO – Course Outcome

			BL	CO	Max. Marks
		UNIT-I			
1		A wire un-wounds itself from a drum of 5 cm in radius. Draw the locus of the free end of the wire for unwinding from the circumference of drum. Also draw normal and tangent to the curve at any point	L3	CO1	14 M
		OR			
2		The distance between two places is 240 km and its equivalent distance on map measures 12 cm. Draw a diagonal scale to indicate 273 km and 128 km.	L3	CO1	14 M
		UNIT-II			
3		A line AB 90mm long is inclined at 30^0 to the HP. Its end A is 12mm above the HP and 20mm in front of the VP. Its front view measure 65mm. Draw the top view of AB and determine its inclination with the VP.	L3	CO2	14 M

	OR			
4	The top view of a 75mm long line CD measures 50mm. The end C is 50mm in front of the VP and 15mm below the HP. Other end D is 15mm in front of the VP and is above the HP. Draw the front view of CD and finds its inclinations with the HP and the VP.	L3	CO2	14 M
	UNIT-III			
5	A plate having shape of an isosceles triangle has base 50mm long and altitude 70mm. It is so placed that in the front view it is seen as an equilateral triangle of 50mm sides and one side inclined at 45^0 to XY. Draw its top view.	L3	CO2	14 M
	OR			
6	A pentagonal pyramid of base side 30 mm and axis length 60 mm is resting on HP on one of its triangular faces with its axis is parallel to VP. Draw its projections.	L3	CO2	14 M
	UNIT-IV			
7	A cone of base diameter 60 mm and axis length 70 mm is resting on HP on its base. It is cut by a plane perpendicular to VP and parallel to one of the end generator and is 10 mm away from it. Draw the front view, sectional top view and the true shape of the section.	L3	CO2	14 M

	OR			
8	A hexagonal prism of base side 30 mm and axis length 60 mm is resting on HP on its base with two of its vertical faces perpendicular to VP. It is cut by a plane inclined at 50^0 to HP and perpendicular to VP and meets the axis of prism at a distance 10 mm from the top end. Draw the development of the lateral surface of the prism.	L3	CO3	14 M
	UNIT-V			
9	Draw the front view, top view and side view of the below figure. 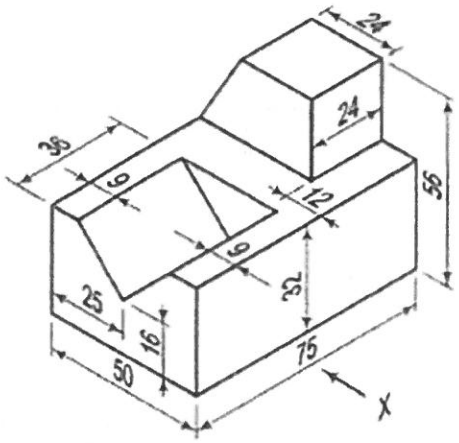 All the dimensions are in mm.	L3	CO4	14 M
	OR			

10	Draw the front view, top view and side view of the below figure. 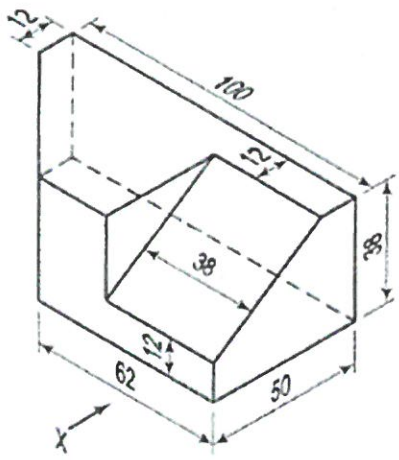 All the dimensions are in mm.	L3	CO4	14 M

Scheme of Valuation for question paper

Code:23ES1104

PVP 23

I B.Tech. I Semester –Regular Examinations
JANUARY-2024
ENGINEERING GRAPHICS (FN)
(Common for CE,AIML,DS)

UNIT-I

1. Construction of Involute – 10M
   Tangent and normal – 2M
   Dimensioning – 2M

OR

2. Construction of scale – 10M
   LOS – 2M
   Indicating ponits – 2M

UNIT-II

3. Drawing the line with True inclination with HP – 4M
   Drawing the line with True inclination with VP – 4M
   Drawing the final projections – 4M
   Dimensioning – 2M

OR

4. Drawing the line with True inclination with HP – 4M
   Drawing the line with True inclination with VP – 4M
   Drawing the final projections – 4M
   Dimensioning – 2M

UNIT-III

5. Drawing initial positions – 4M
   Drawing first stage Projections – 4M
   Drawing Second stage Projections – 4M
   Dimensioning – 2M

OR

6. Drawing first stage Projections – 6M
   Drawing Second stage Projections – 6M
   Dimensioning – 2M

UNIT-IV

7. Drawing sectional top view – 6M
   Drawing true shape – 6M
   Dimensioning – 2M

8. Drawing initial positions – 4M
   Development – 8M
   Dimensioning – 2M

UNIT-V

9. Front View – 5M
   Top view – 4M
   Side view – 3M
   Dimensioning – 2M

OR

10. Front View – 5M
    Top view – 4M
    Side view – 3M
    Dimensioning – 2M

(1)

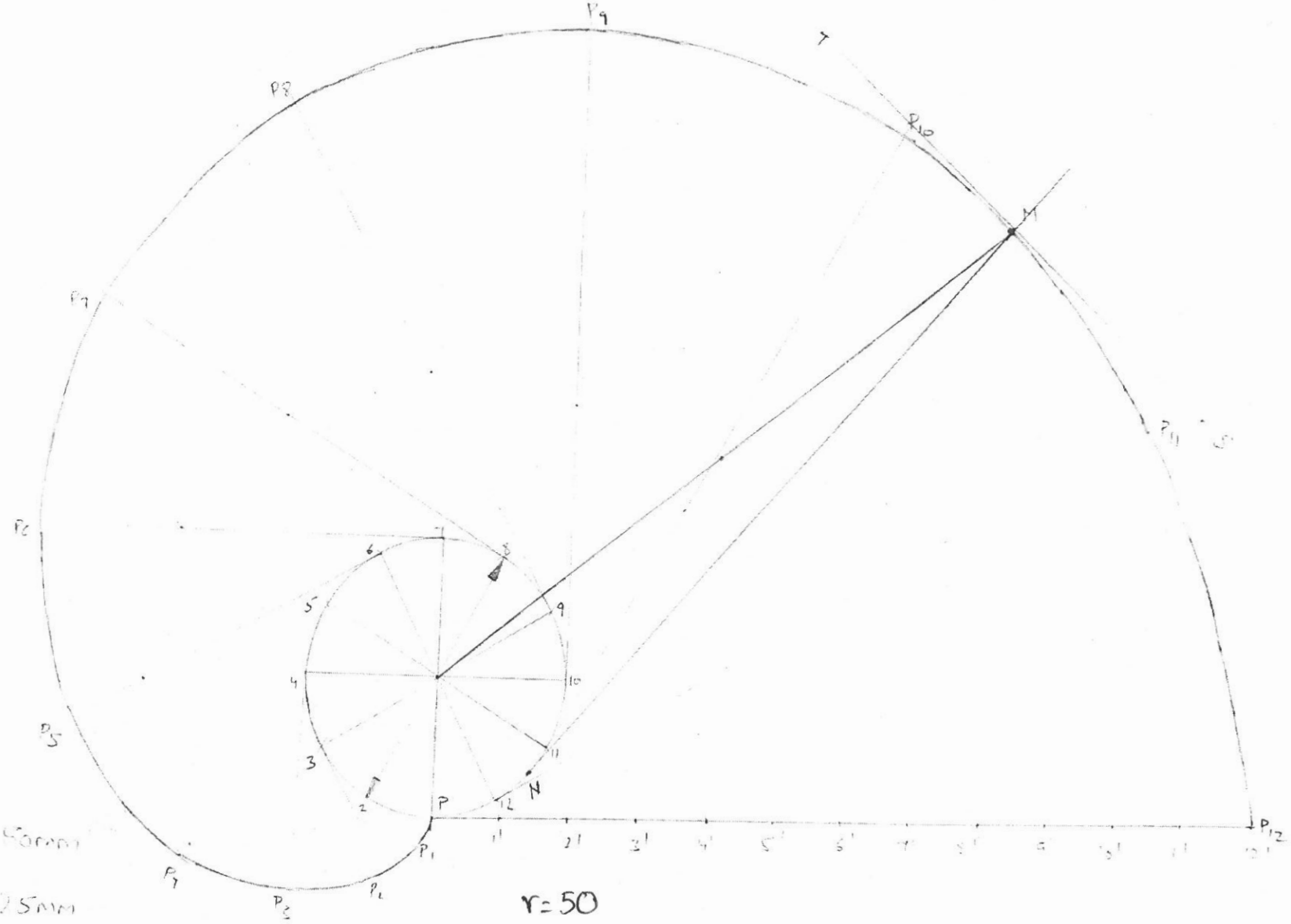

50cm = 50mm

$\frac{50}{2}$ = 25mm

Radius = 25mm

50

r = 50

πD = ~~150~~ 314

(2)

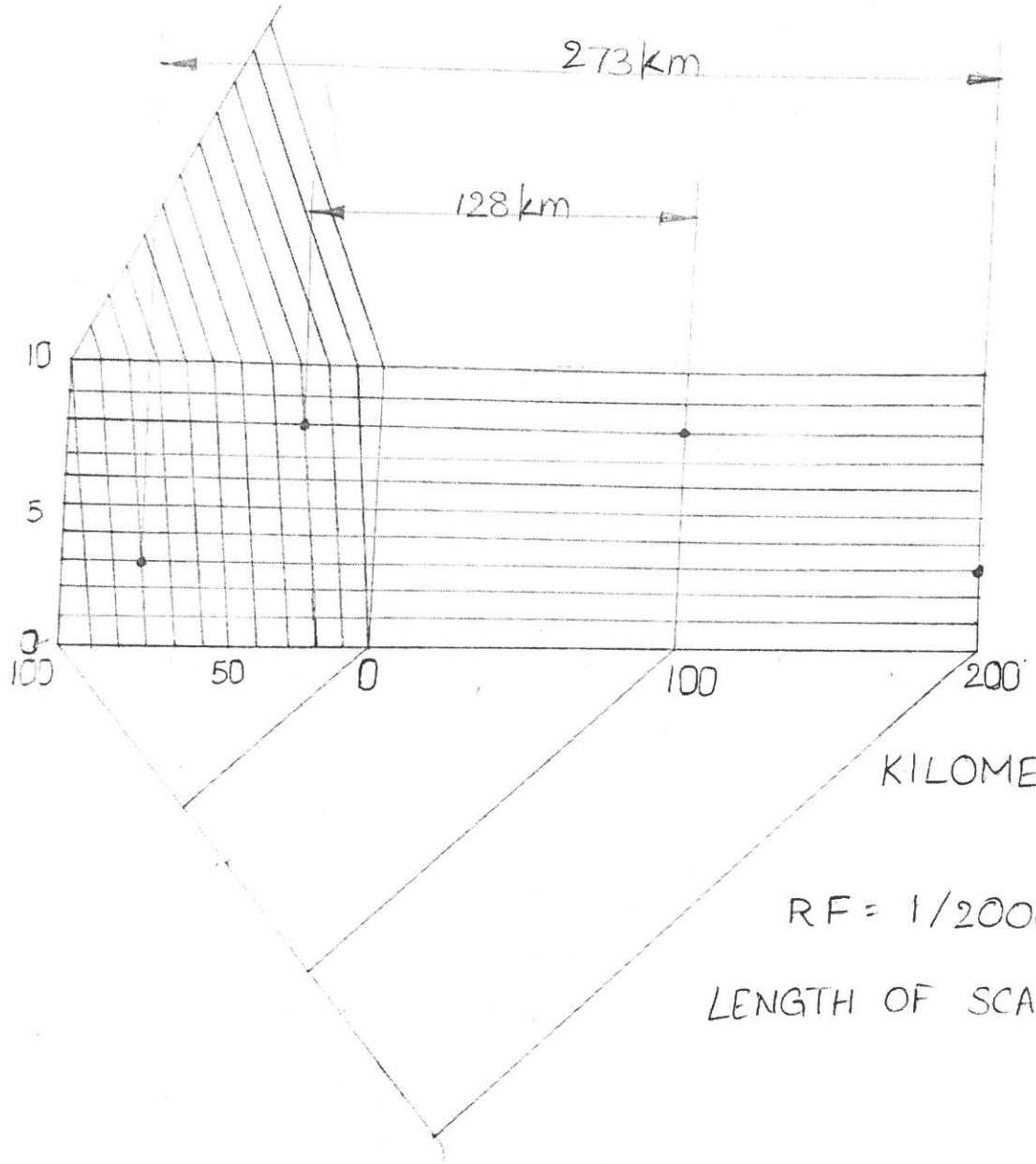

RF = 1/2000000

LENGTH OF SCALE = 136·5 mm

(3) A line AB 90mm long is inclined at 30° to the HP. Its end A is 12mm above the HP and 20mm infront of the VP. Its front view measure 65mm. Draw the top view of AB and determine its inclination with the VP.

Given TL = 90mm, $\theta = 30°$; $a'b' = 65$mm

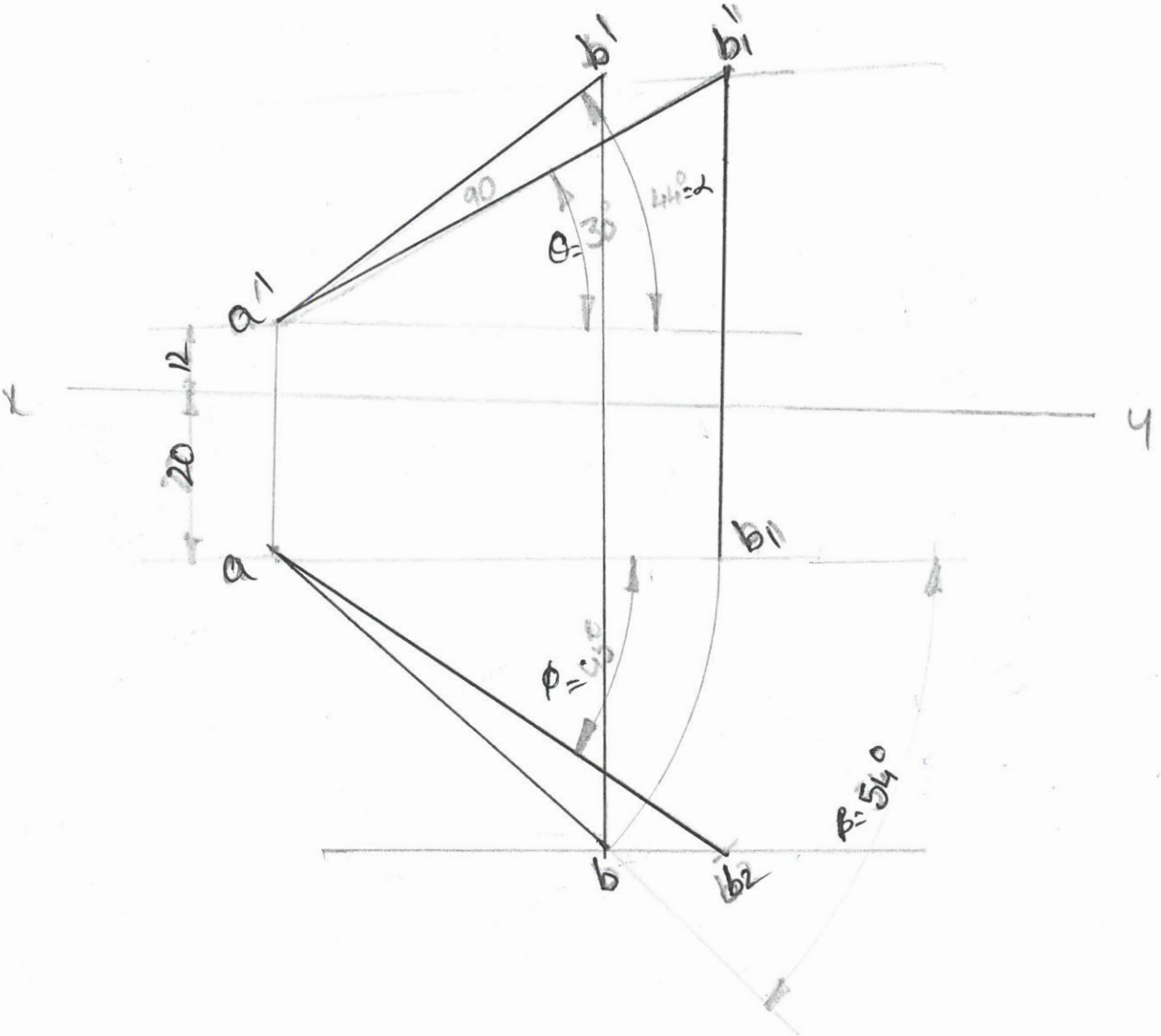

(4) The top view of a 75mm long line CD measures 50mm The end C is 50mm infornt of VP and 15mm below the HP other end D is 15mm infornt of the VP and is above the HP Draw the front view of CD and find its inclination with the HP & VP

Given TL = 75mm c'd' FV = 50mm (cd)

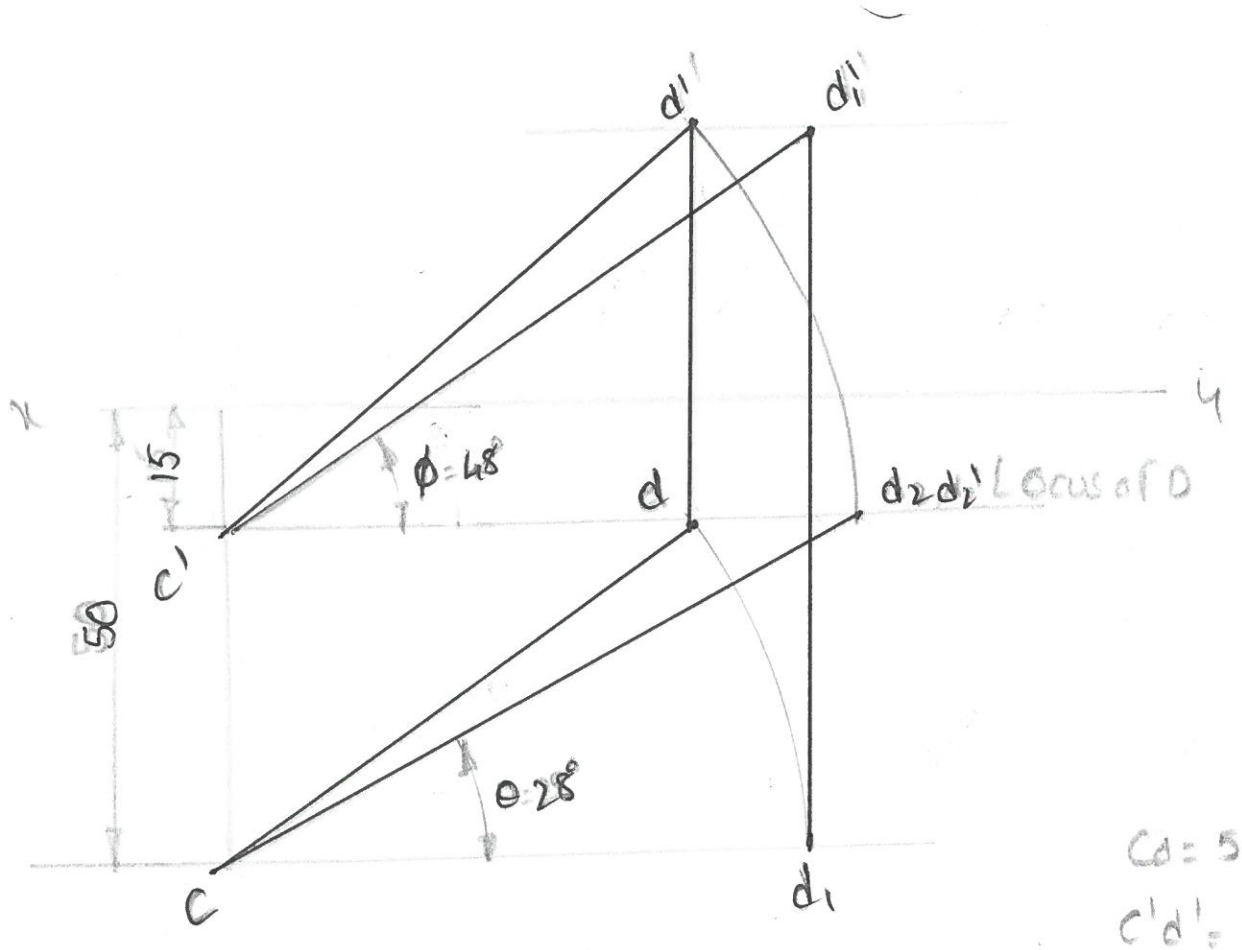

cd = 50

c'd' = 75

(5)

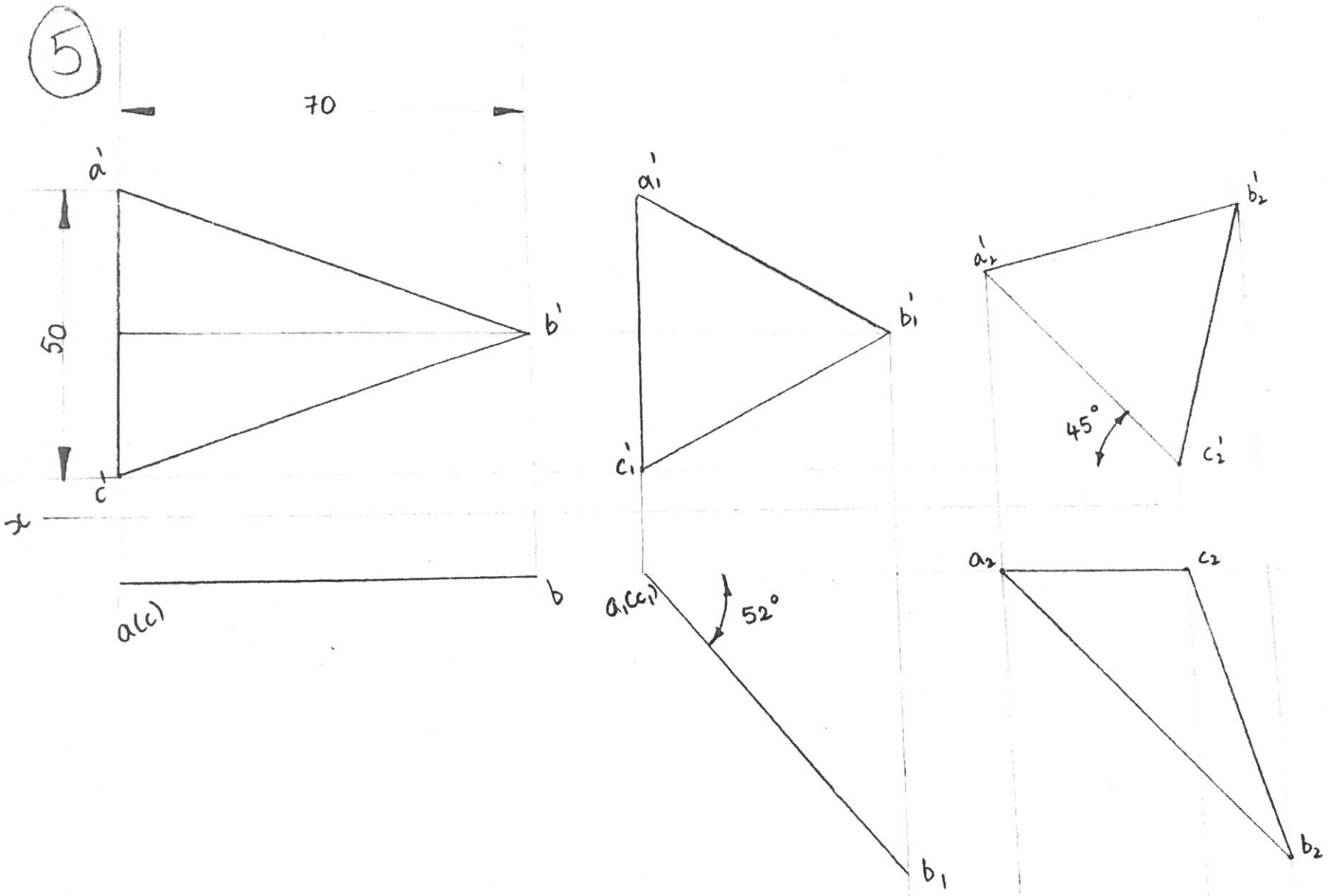

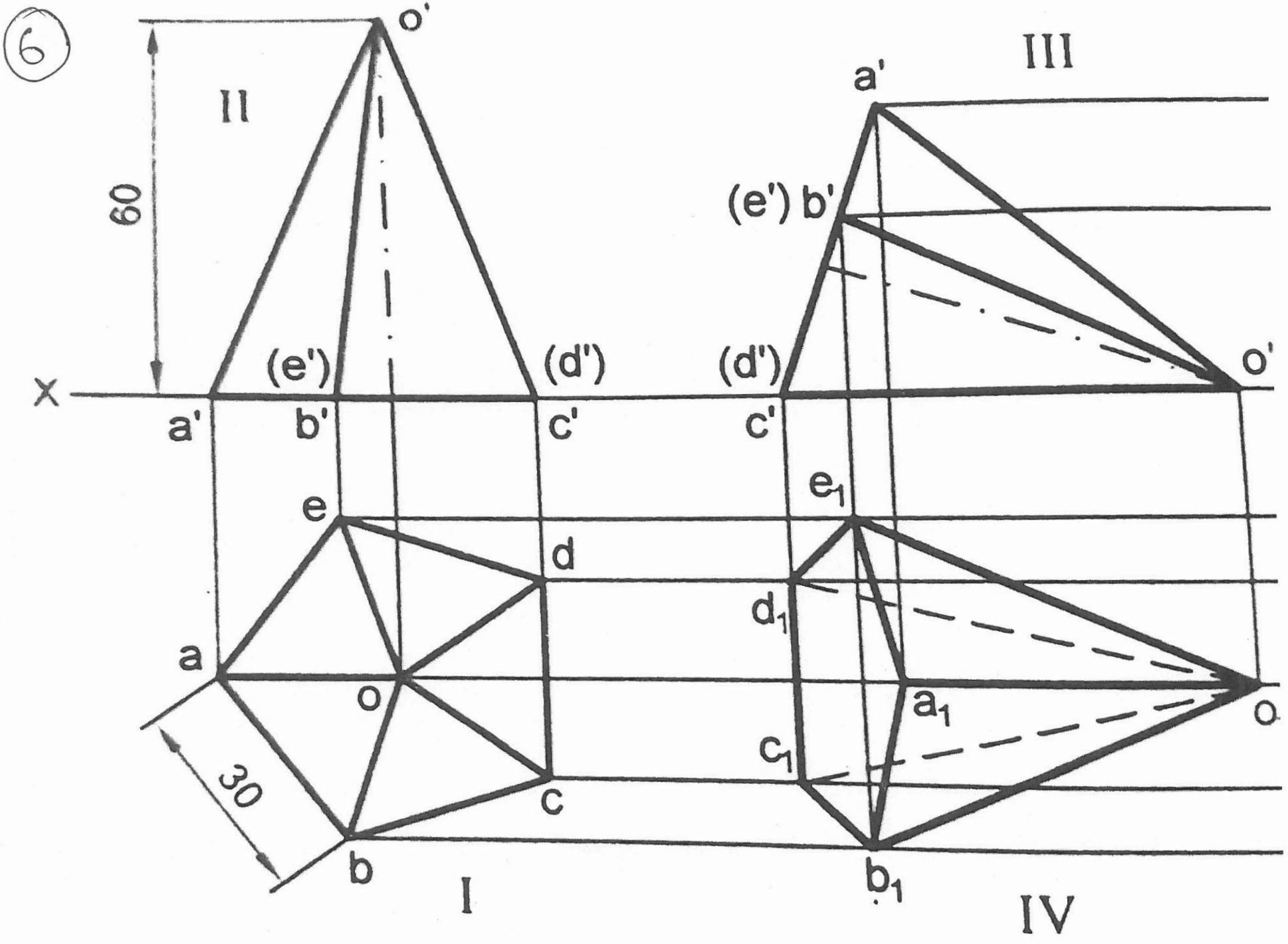
6
II
III
I
IV
60
30
X
o'
a'
b'
c'
(e')
(d')
e
d
a
o
c
b
e1
d1
a1
c1
b1

7

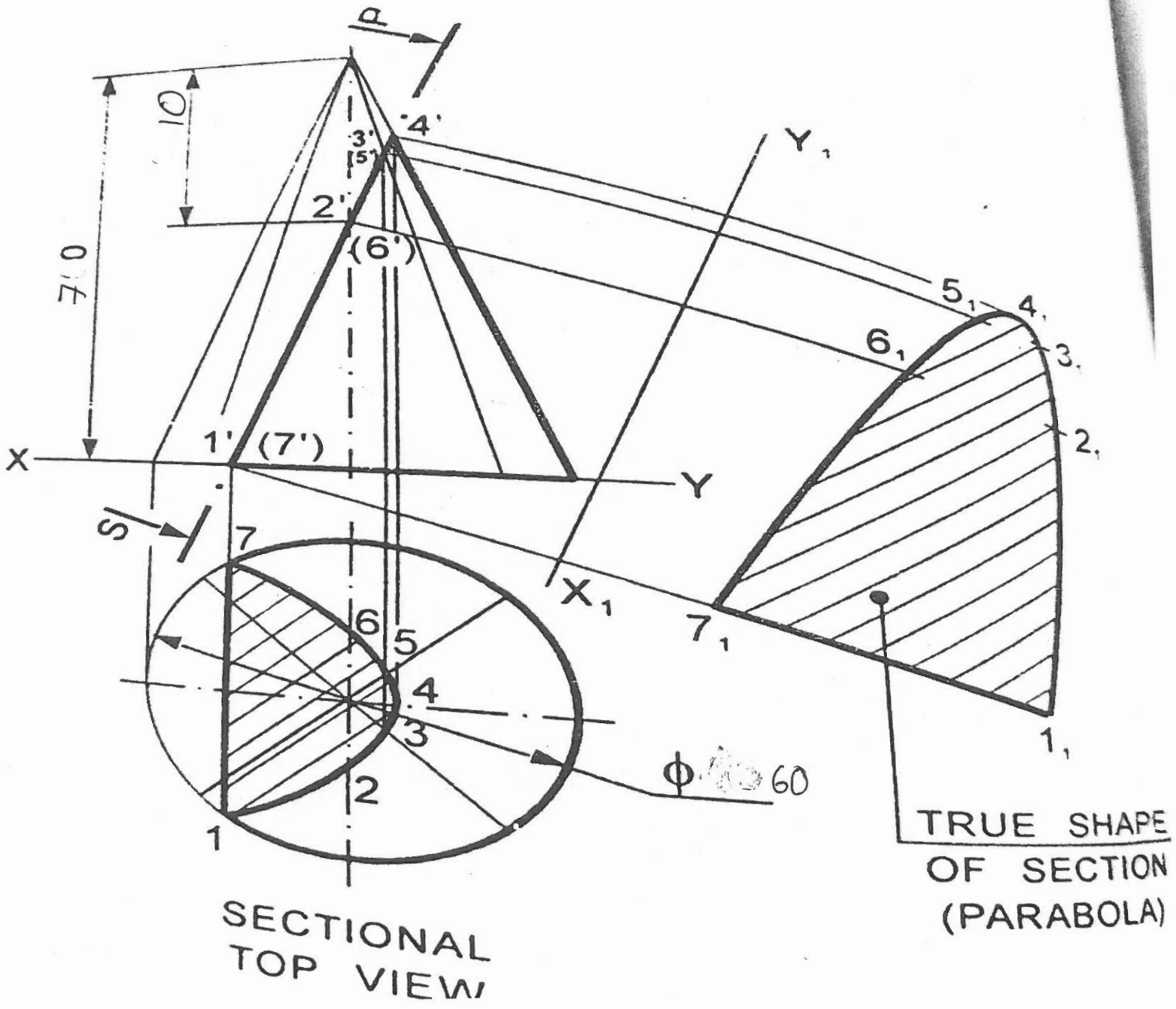

P
10
70
4'
3'
(5')
2'
(6')
1'
(7')
X
Y
S
7
6
5
4
3
2
1
Y1
X1
5₁
4₁
6₁
3₁
2₁
7₁
1₁
φ 60
TRUE SHAPE
OF SECTION
(PARABOLA)
SECTIONAL
TOP VIEW

8

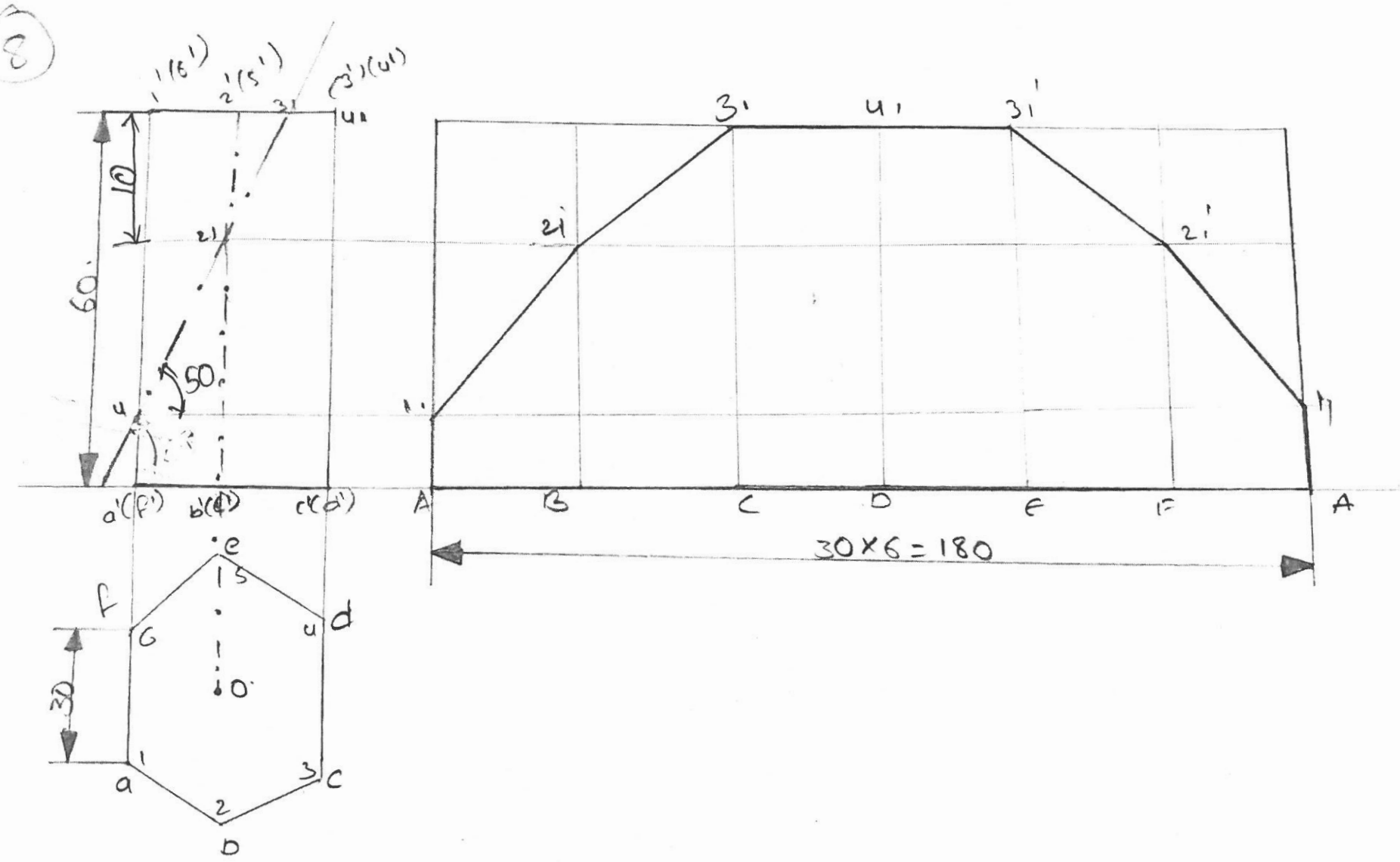

1'(6')
2'(5')
3'(4')
4'
10
60
2'
50
4
a'(f')
b'(e')
c'(d')
e
5
f
6
4
d
30
o
1
a
2
b
3
c
3'
4'
3'
2'
2'
1'
1'
A
B
C
D
E
F
A
30×6=180

9

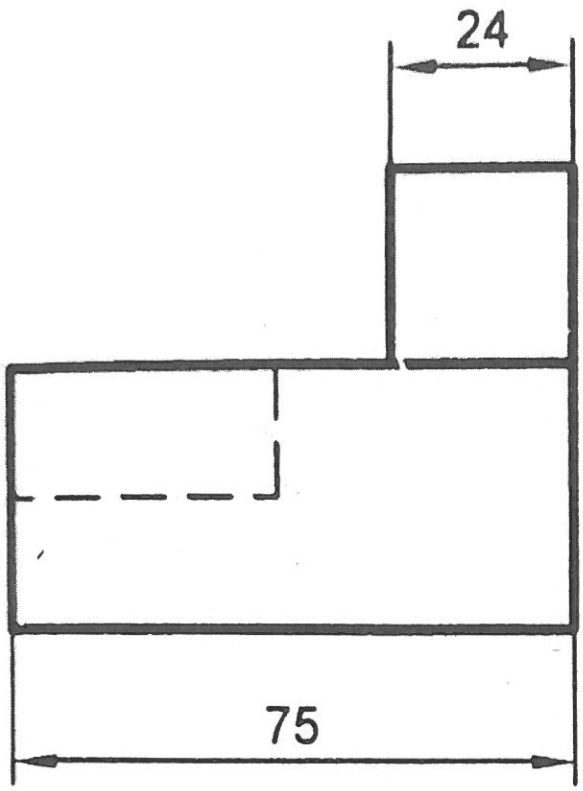

FRONT VIEW

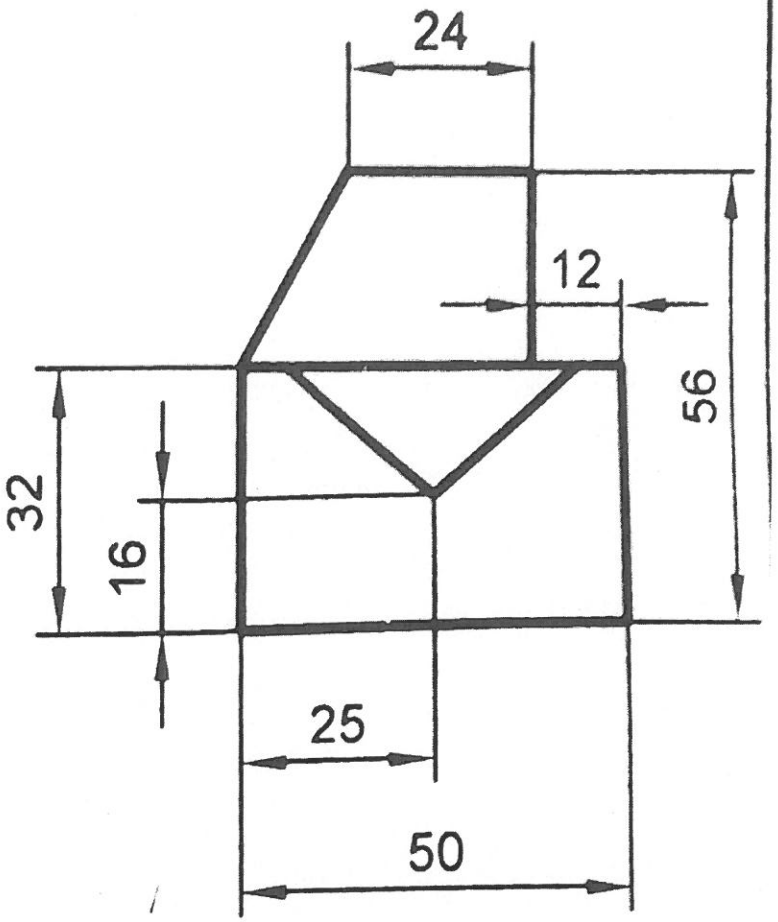

LEFT SIDE VIEW

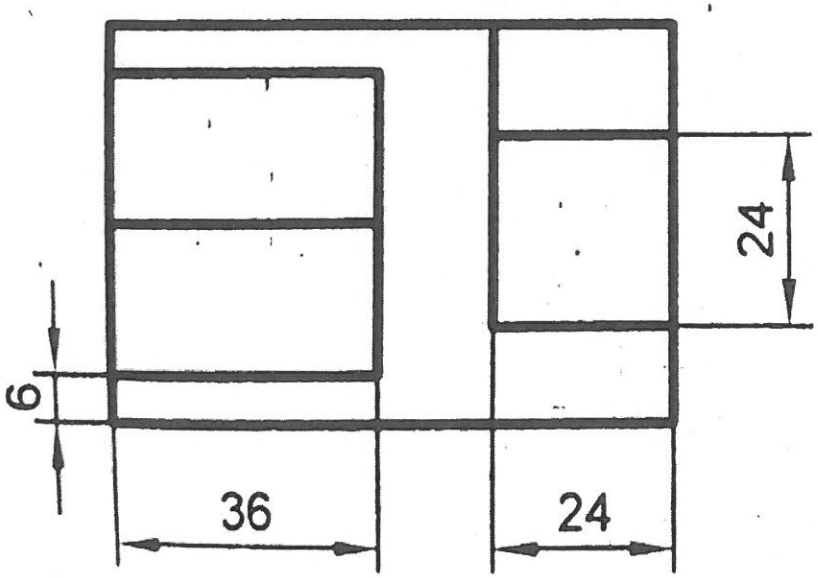

TOP VIEW
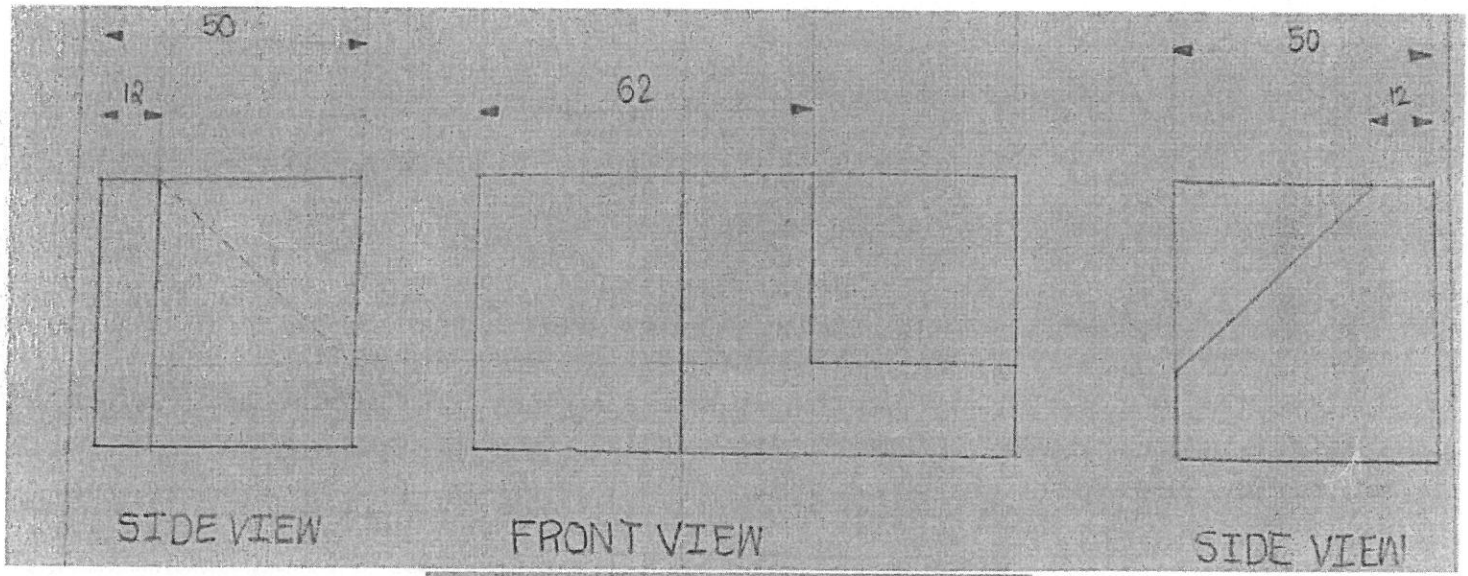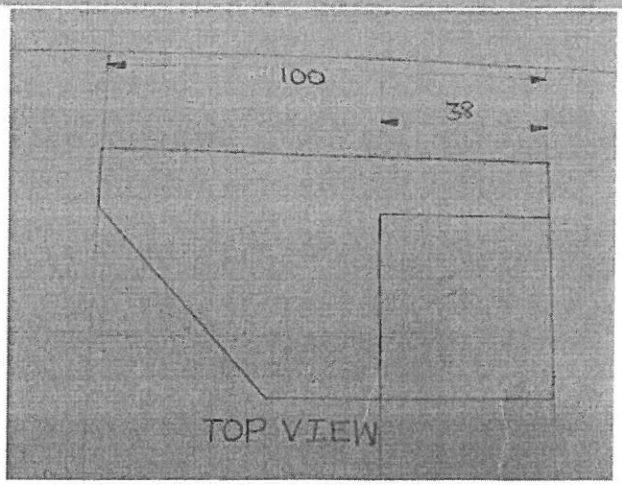
(10)